Current part is item (2) on diagram. Available at www.oshkoshequipment.com

(1) GROUP (a) FIG. NO.	(2) (b) ITEM NO.	SMR CODE	(3) NATIONAL STOCK NUMBER	(4) PART NUMBER	(5) FSCM	(6) DESCRIPTION USABLE ON CODE	(7) U/M	(8) QTY INC IN UNIT
						1209-AIR COMPRESSOR ASSEMBLY		
128	1	PAOZZ	4310-00-863-3155	MS51322-1	96906	COMPRESSOR,RECIPROCATING, POWER DRIVEN	EA	1
128	2	PAOZZ	5330-00-498-2426	11641987	19207	GASKET: UNLOADER VALVE	EA	1
128	3	PAOZZ		N13799E	06721	VALVE ASSEMBLY, UNLOADER: AIR COMPRESSOR	EA	1
128	4	PAOZZ	5330-00-828-5027	7748823	19207	GASKET: COMPRERSSOR DISCHARGE ELBOW	EA	1
128	5	PAOZZ	5310-00-550-1130	MS35333-40	96906	WASHER,LOCK: 1/4 ID, 0.478 OD, UNLOADER VALVE ASSEMBLY TO AIR COMPRESSOR	EA	4
128	6	PAOZZ	5310-00-768-0319	MS51968-2	96906	NUT,PLAIN,HEXAGON: UNLOADER VALVE TO COMPRESSOR	EA	4
128	7	PAOZZ	4730-00-202-9744	201697	06853	ELBOW, PIPE TO TUBE: COMPRESSOR UNLOADER VALVE	EA	1
128	8	PAOZZ	4730-00-518-9043	5189043	19207	ELBOW, FLANGE TO TUBE: AIR COMPRESSOR DISCHARGE AB	EA	1
128	9	PAZZ	4730-00-054-2572	MS39196-4	96906	NUT,TUBE COUPLING: COMPRESSOR ELBOW AB,AC	EA	1
128	10	PAOZZ	4730-00-054-2571	MS39197-4	96906	SLEEVE, COMPRESSION: COMPRESSOR ELBOW AB,AC	EA	1
128	11	PAOZZ	4730-00-078-4097	8748337	19207	ELBOW, TUBE TO BAR:DISCHARGE AIR COMPRESSOR AB	EA	1
128	12	PAOZZ	5310-00-959-4679	MS35340-45	96906	WASHER,LOCK: COMPRESSOR DISCHARGE AND AIR CLEANER TO COMPRESSOR	EA	4
128	13	PAOZZ	5306-00-225-8503	MS90725-39	96906	BOLT,MACHINE: DISCHARGE ELBOW AB	EA	2
128	14	PAOZZ	5306-00-225-8499	MS90725-34	96906	SCREW, CAP, HEXHEAD: AIR COMPRESSOR DISCHARGE MANIFOLD TO AIR COMPRESSOR AC	EA	2
128	15	PAOZZ	2530-00-908-7303	7771286	19207	MANIFOLD, DISCHARGE: AIR COMPRESSOR AC	EA	1
128	16	PAOZZ	5306-00-225-8497	MS90725-32	96906	BOLT, MACHINE, HEXHEAD: AIR CLEANER TO AIR COMPRESSOR	EA	2
128	17	PAOZZ	5330-00-818-0508	7748826	19207	GASKET: AIR COMPRESSOR AIR CLEANER	EA	1
128	18	PAOZZ	2530-00-986-0013	MS53005-1	96906	AIR CLEANER, INTAKE: AIR COMPRESSOR	EA	1
128	19	PAOZZ	5315-00-012-4553	MS35756-17	96906	KEY, WOODRUFF: COMPRESSOR SHAFT PULLEY	EA	1
128	20	PAOZZ	2530-00-860-0573	10889938	19207	PULLEY,HALF COMPRESSOR: COMPRESSOR DRIVE	EA	1
128	21	PAOZZ	5305-00-269-3214	MS90725-64	96906	SCREW, CAP, HEXHEAD: ADJUSTABLE PULLEY HALF TO PULLEY FLANGE	EA	2
128	22	PAOZZ	5310-00-959-4675	MS35340-46	96906	WASHER,LOCK:ADJUSTABLE PULLEY HALF TO PULLEY FLANGE	EA	2
128	23	PAOZZ	3030-00-294-9541	8332236	19207	BELT: DRIVE, AIR COMPRESSOR AA	EA	1
128	23	PAOZZ	3030-00-849-1033	10889932	19207	BELT: DRIVE, AIR COMPRESSOR AB,AC	EA	1

Current part is item (2) on diagram. Available at www.oshkoshequipment.com

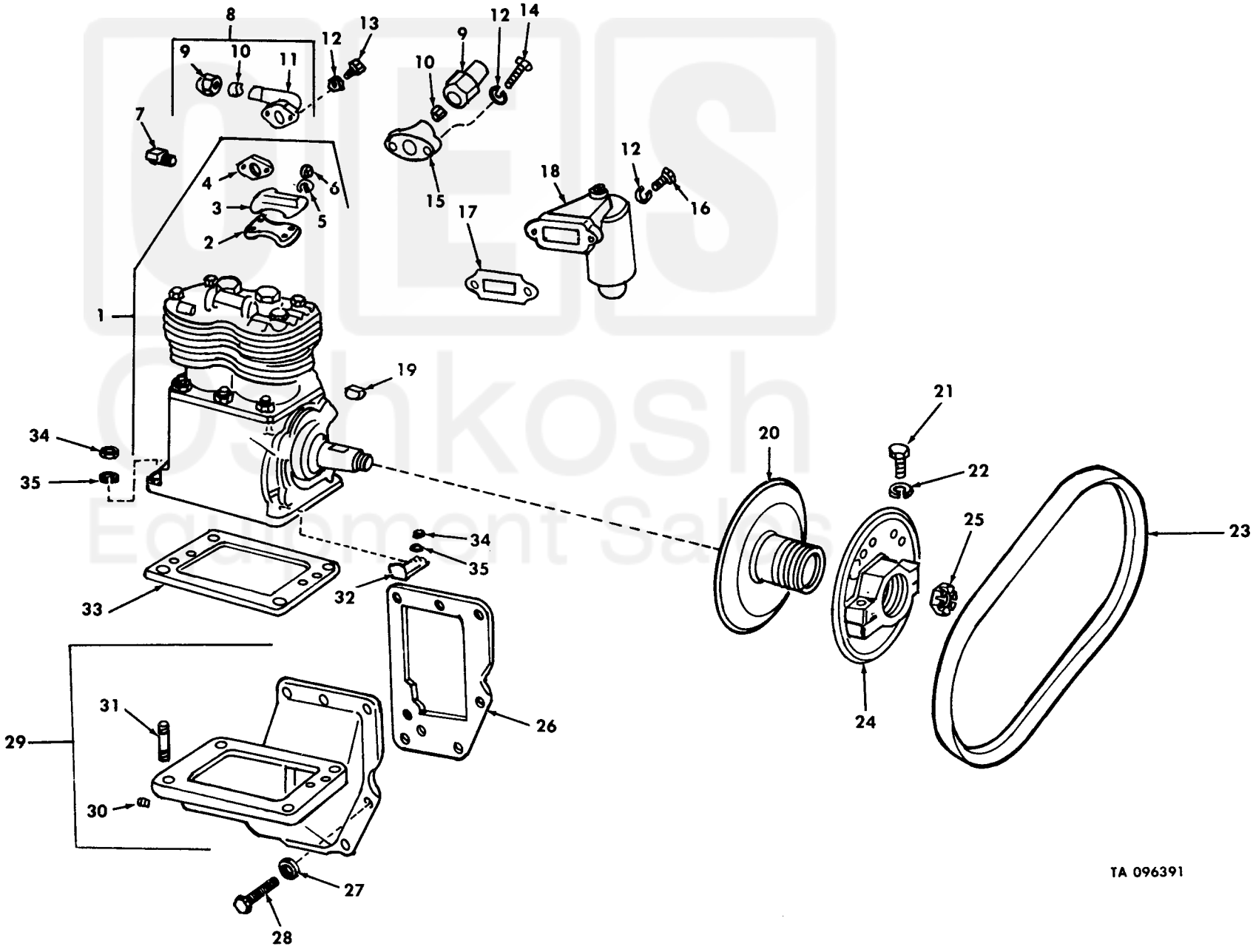

Figure 128. Air compressor, pulley and belt.

Current part is item (2) on diagram. Available at www.oshkoshequipment.com